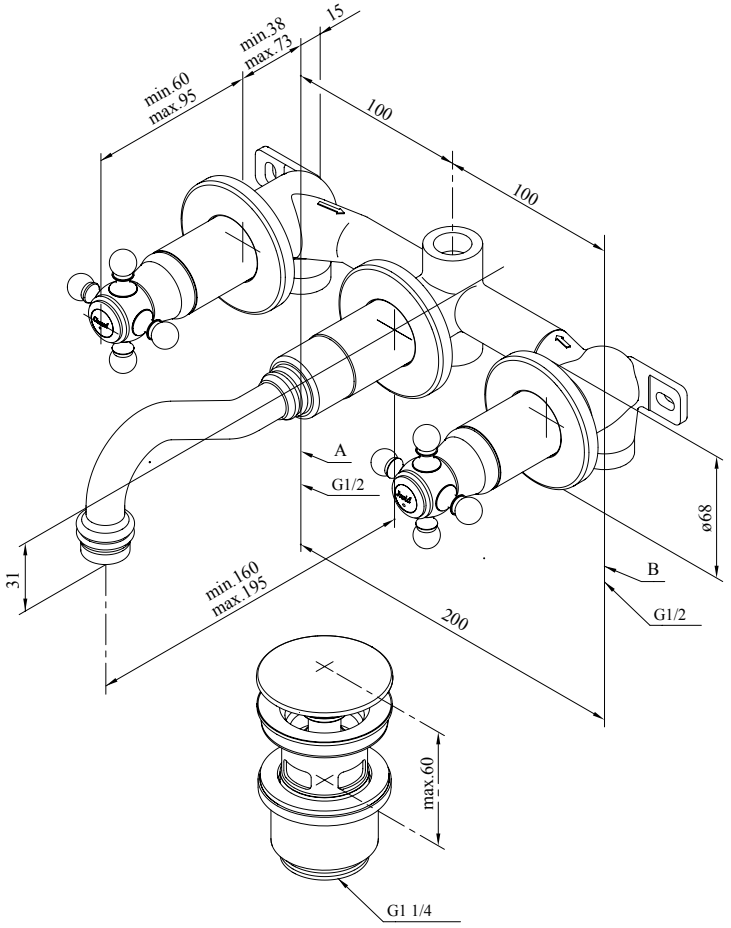
min.60
max.95
min.38
max.73
15
100
100
A
G1/2
ø68
B
G1/2
31
min.160
max.195
200
max.60
G1 1/4